F2004 Installation Guide

14 Station Multi Jungle

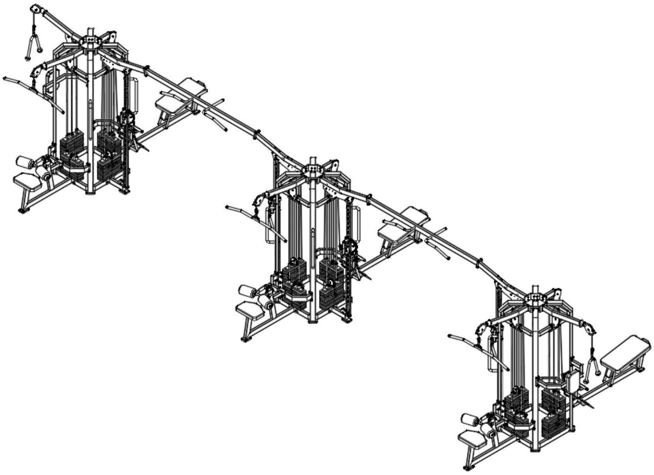

Table of contents

Introduction …………………………………………………………………………… 2

Assembly …………………………………………………………………………… 3

List of accessories …………………………………………………………………………… Attached

Introduction

Please take the time to read this instruction carefully before installation. Please refer to the various lists in the manual to confirm the integrity and quantity of all parts (if there is any missing part or damage during transportation, please call our after-sales service immediately for instructions). Please install the equipment correctly according to the relevant instructions. This equipment is designed to provide the smoothest and most effective exercise. After installation, you need to understand all functions to use it correctly. If you find any problems during use, you should stop using it immediately to avoid physical injury and equipment damage. Please refer to the relevant instructions in time to inquire about the cause. If you cannot solve it, please call our after-sales service. After reading all the instructions carefully, please continue.

tool	Rubber rod
	Level
	Hexagon wrench
	Circlip pliers
	Adjustable wrench
Note: It is recommended that two or more people work together during assembly.	

Assembly

Step 1: Connect #1, #2, #3, #4, #5, #6, and #7 to form #BCP1 using the following method:
- 8xHexagon socket head screw M10*55 (#8)
- 8xHexagon socket head screw M10*35 (#9)
- 16xHexagon socket head screw M10*25 (#10)
- 32xFlat washer M10-D20 (#12)
- 32xSpring washer M10 (#11)

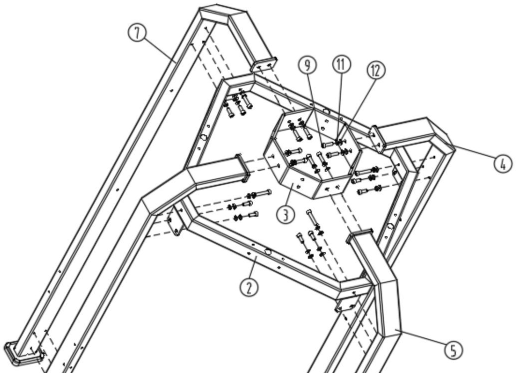

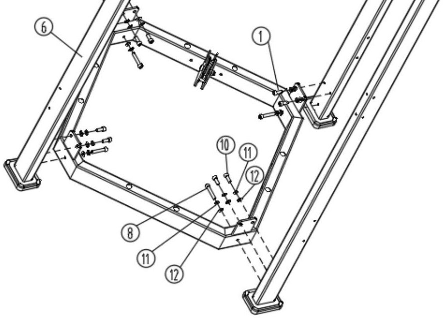

Assembly

Step 2: Connect #BCP1, #13, #14, #15, #16, #17, and #18 to form #BCP2 using the following method:

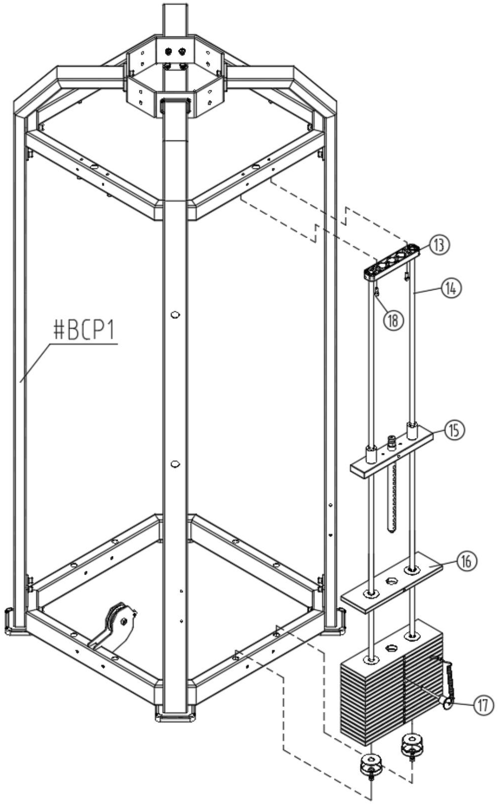

Assembly

Step 3: Connect #BCP2, #13, #14, #15, #16, #17, and #18 to form #BCP3 using the following method:

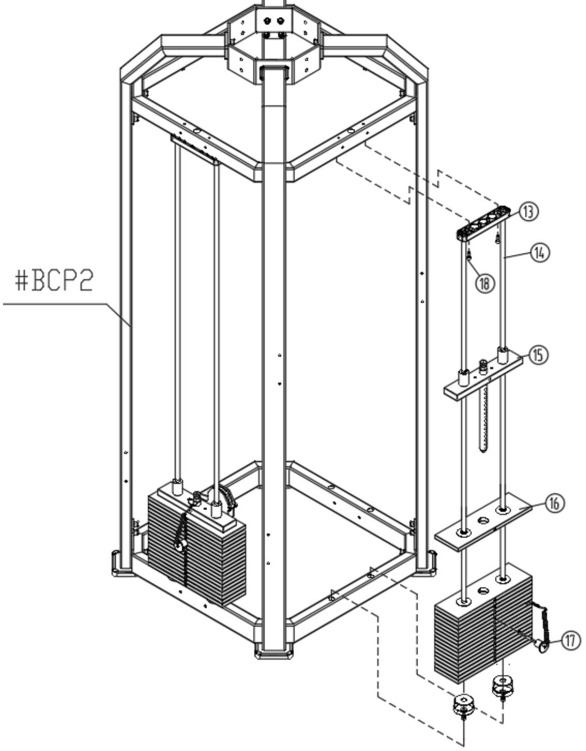

Step 4: Connect #BCP3, #13, #14, #15, #16, #17, and #18 to form #BCP4 using the following method:

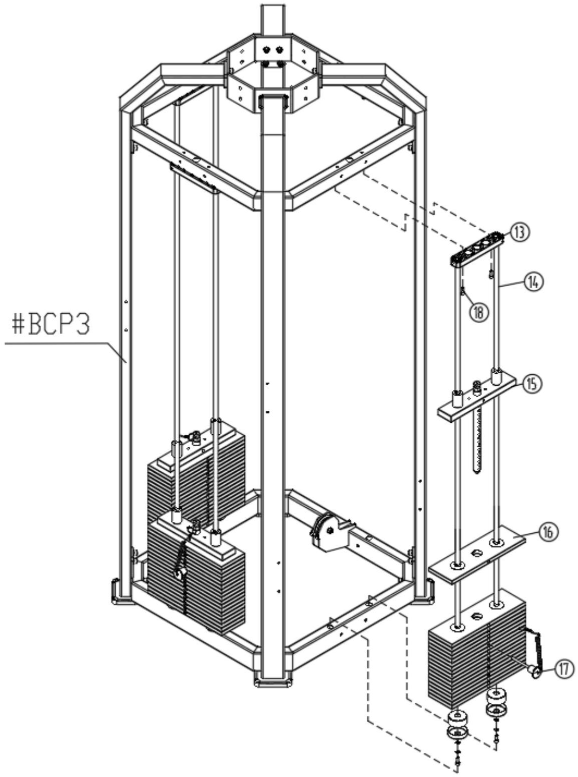

Step 5: Connect #BCP4, #13, #14, #15, #16, #17, and #19 to form #BCP5 using the following method:

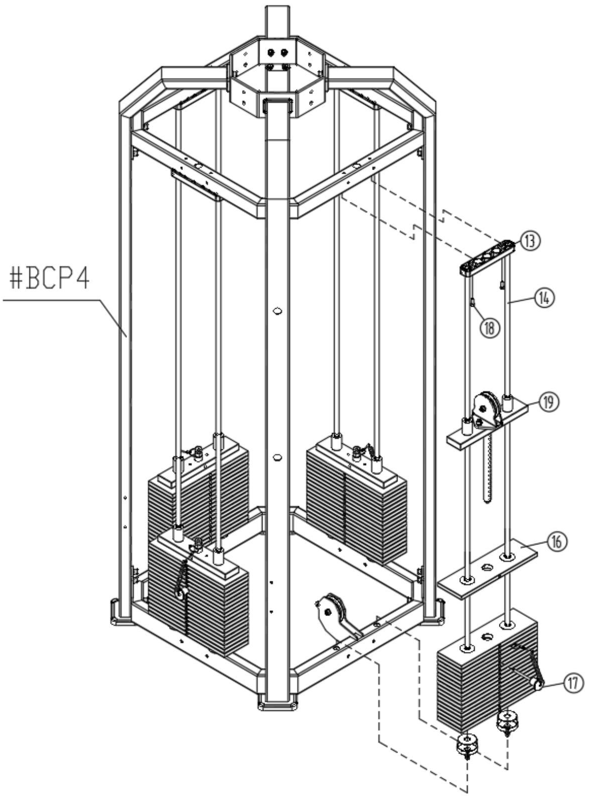

Step 6: Connect #19, #20, #21, and #22 to form #BCP6 using the following method:
- ·4xHexagon socket head screw M10*25 (#10)
- ·4xFlat washer M10-D20 (#12)
- ·4xSpring washer M10 (#11)
- ·4xHexagon socket head screw M8*25 (#24)
- ·4xFlat washer M8-D16 (#25)

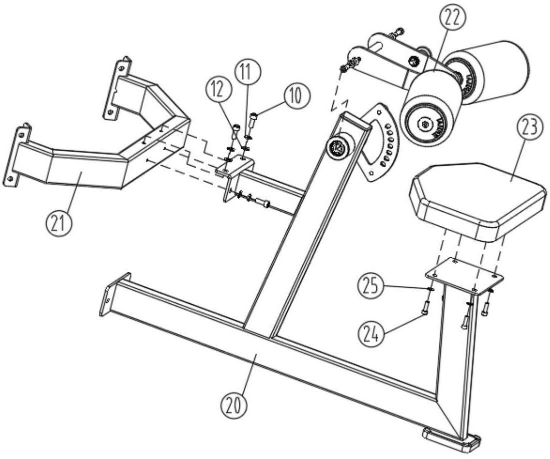

Assembly

Step 7: Connect #BCP5, #BCP6, and #26 to form #BCP7 using the following method;

- 2xHexagon socket head screw M10*60 (#27)
- 2xHexagon socket head screw M10*35 (#9)
- 12xHexagon socket head screw M10*25 (#10)
- 2xFlat washer M10-D50 (#28)
- 16xFlat washer M10-D20 (#12)
- 16xSpring washer M10 (#11)
- 2xHexagonal self-locking nut M10 (#29)

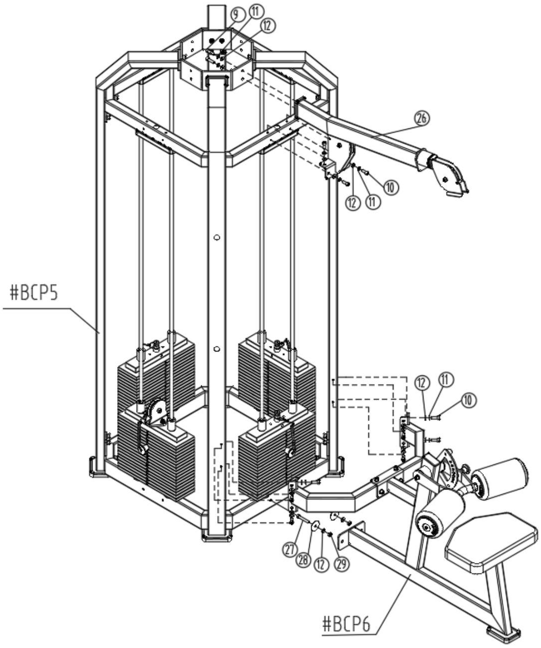

Assembly

Step 8: Connect #BCP7 and 30 to form #BCP8 using the following method:

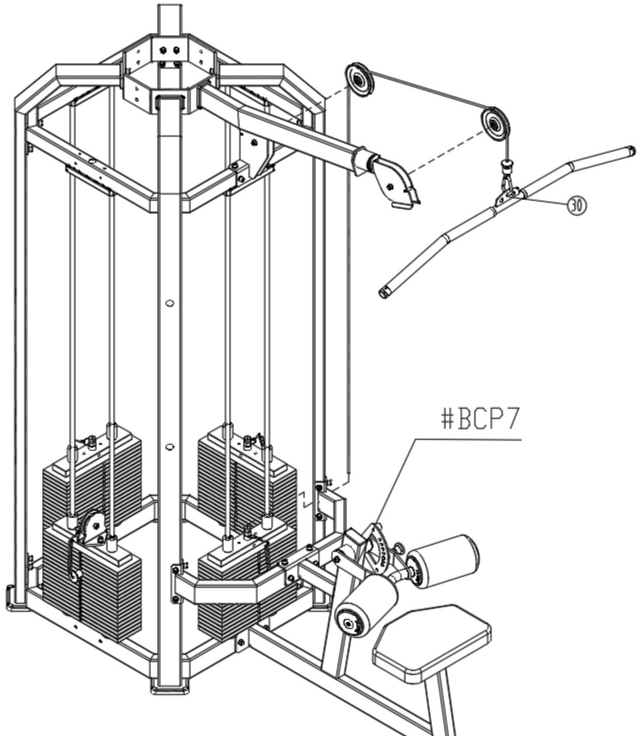

Assembly

Step 9: Connect #31 and #32 to form #BCP9 using the following method;

- 4xHexagon socket head screw M8*25 (#24)
- 4xFlat washer M8-D16 (#25)

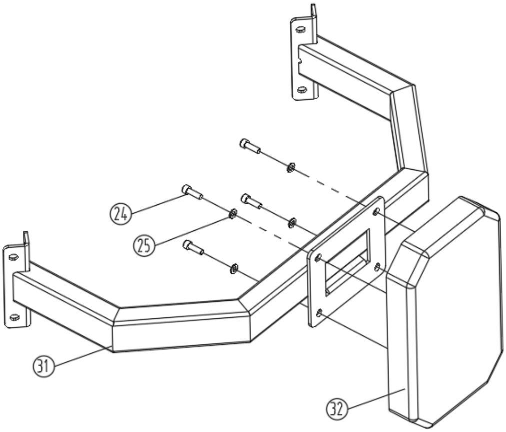

Assembly

Step 10: Connect #BCP9 and #26 to form #BCP10 using the following method;

- 2xHexagon socket head screw M10*35 (#9)
- 12xHexagon socket head screw M10*25 (#10)
- 14xFlat washer M10-D20 (#12)
- 14xSpring washer M10 (#11)

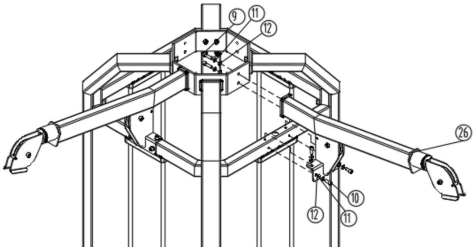

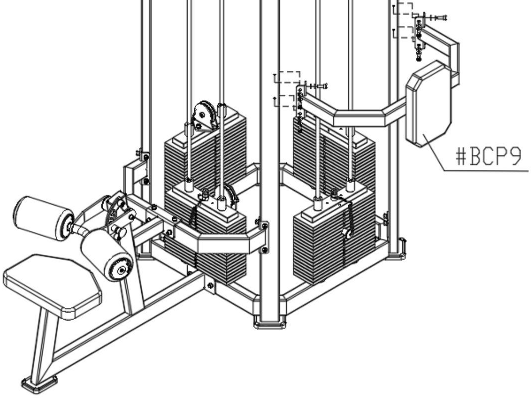

Assembly

Step 11: Connect #BCP10 and #33 to form #BCP11 using the following method;

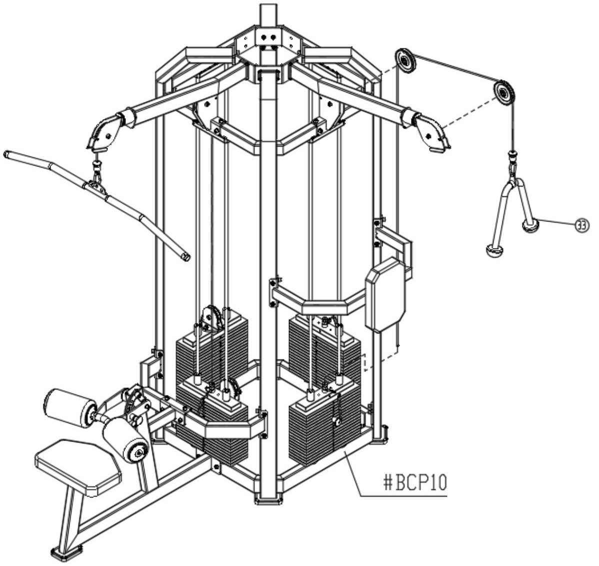

Assembly

Step 12: Connect #34, #35, #36, #37, and #40 to form #BCP12 using the following method;

- 8**x**Hexagon socket head screw M10*25 (#10)
- 4**x**Hexagon socket head screw M8*25 (#24)
- 2**x**Hexagon socket head screw M8*16 (#38)
- 8**x**Flat washer M10-D20 (#12)
- 6**x**Flat washer M8-D16 (#25)
- 8**x**Spring washer M10 (#11)
- 2**x**Spring washer M8 (#39)

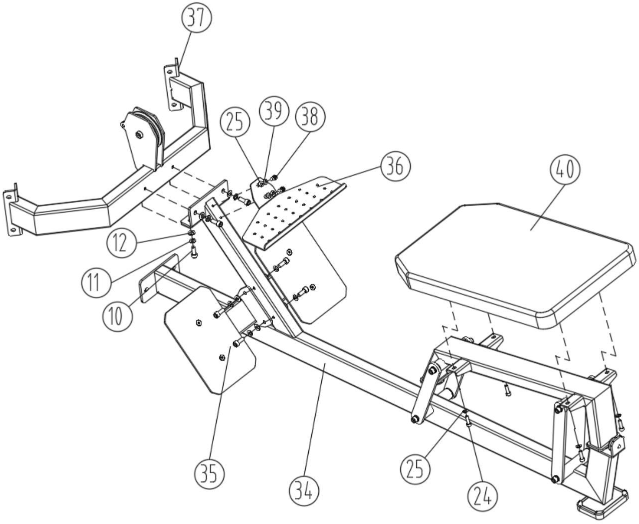

Assembly

Step 13: Connect #BCP11, #BCP12, and #48 to form #BCP13 using the following method;

- 2xHexagon socket head screw M10*60 (#27)
- 2xHexagon socket head screw M10*35 (#9)
- 12xHexagon socket head screw M10*25 (#10)
- 2xFlat washer M10-D50 (#28)
- 16xFlat washer M10-D20 (#12)
- 16xSpring washer M10 (#11)
- 2xHexagonal self-locking nut M10 (#29)

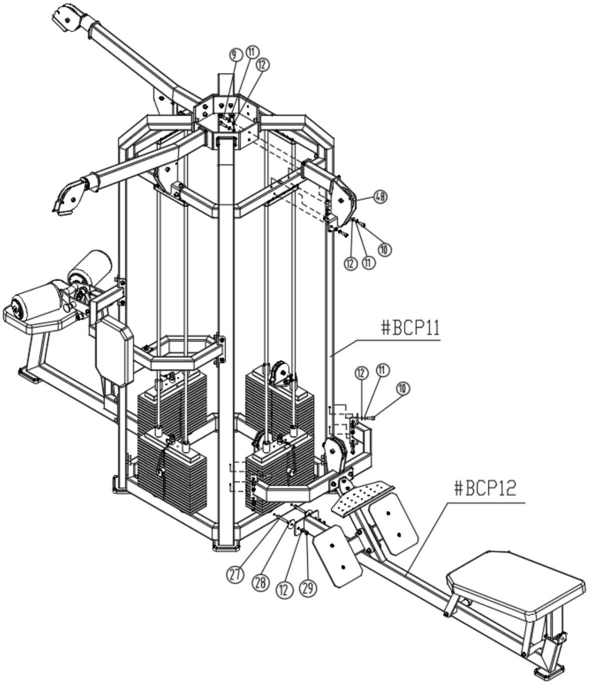

Assembly

Step 14: Connect #BCP13 and #38 to form #BCP14 using the following method;

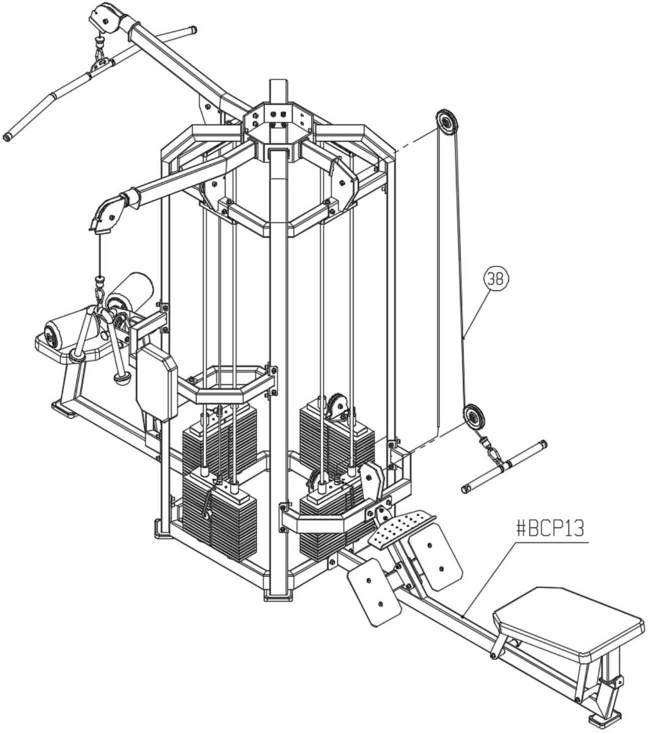

Step 15: Connect #BCP14, #41, #42, #43, and #44 to form #BCP15 using the following method;

·2**x**Hexagon socket head screw M10*60 (#27)
·2**x**Hexagon socket head screw M10*35 (#9)
·8**x**Hexagon socket head screw M10*25 (#10)
·2**x**Flat washer M10-D50 (#28)
·12**x**Flat washer M10-D20 (#12)
·12**x**Spring washer M10 (#11)
·2**x**Hexagonal self-locking nut M10 (#29)

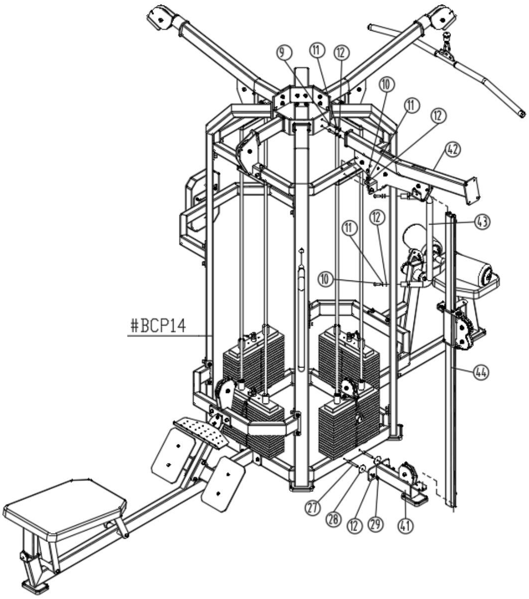

Step 16: Connect #BCP15 and #45 to form #BCP16 using the following method;

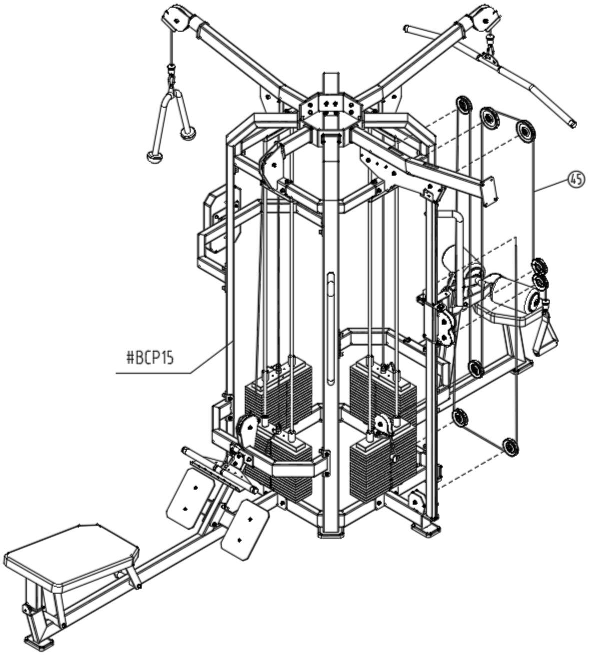

Step 17: Repeat the above steps to form #BCP17. When assembling, pay attention to the mirror image relationship of some parts with #BCP16;

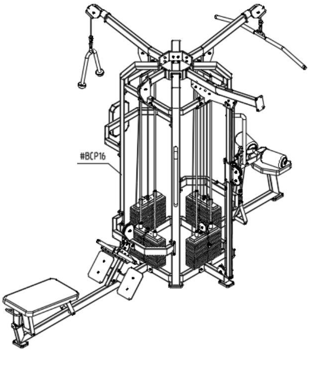

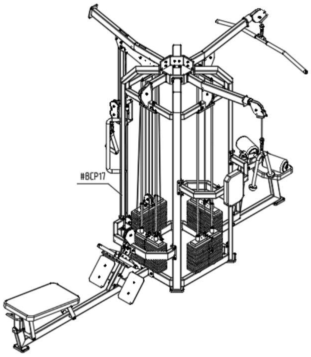

Assembly

Step 18: Repeat the above steps to form #BCP18. When assembling, pay attention to the different installation positions of the connecting column (#4) and the connecting column (#7);

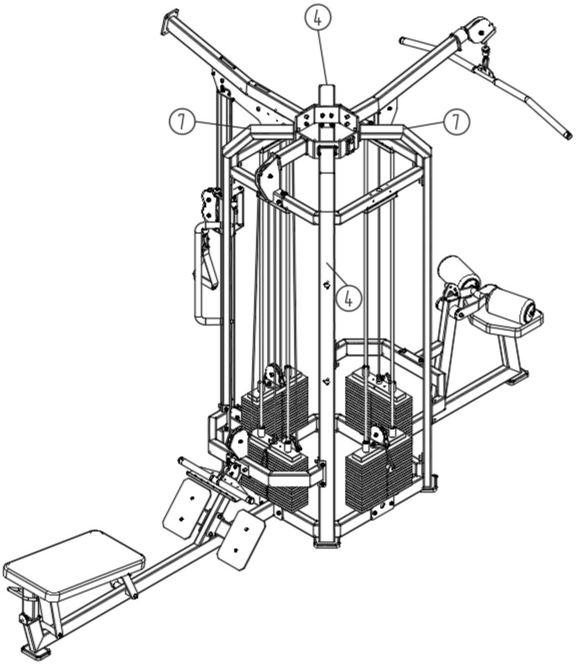

Assembly

Step 19: Connect #BCP18, #41, #42, #43, and #44 to form #BCP19 using the following method;

- 2xHexagon socket head screw M10*60 (#27)
- 2xHexagon socket head screw M10*35 (#9)
- 8xHexagon socket head screw M10*25 (#10)
- 2xFlat washer M10-D50 (#28)
- 12xFlat washer M10-D20 (#12)
- 12xSpring washer M10 (#11)
- 2xHexagonal self-locking nut M10 (#29)

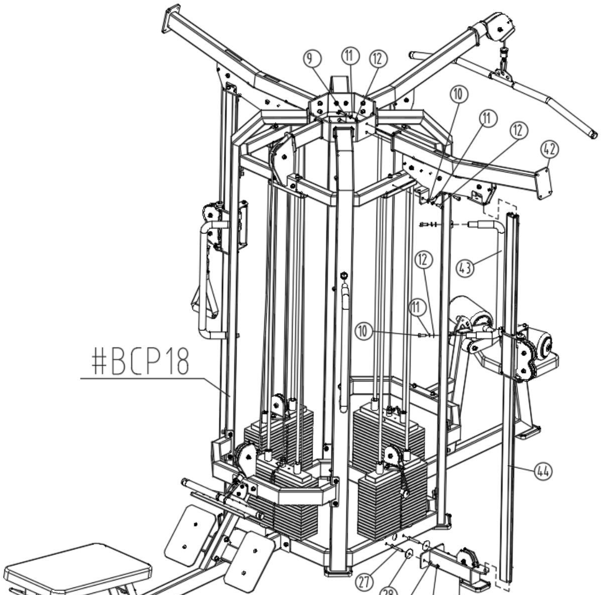

Assembly

Step 20: Connect #BCP19 and #45 to form #BCP20 using the following method;

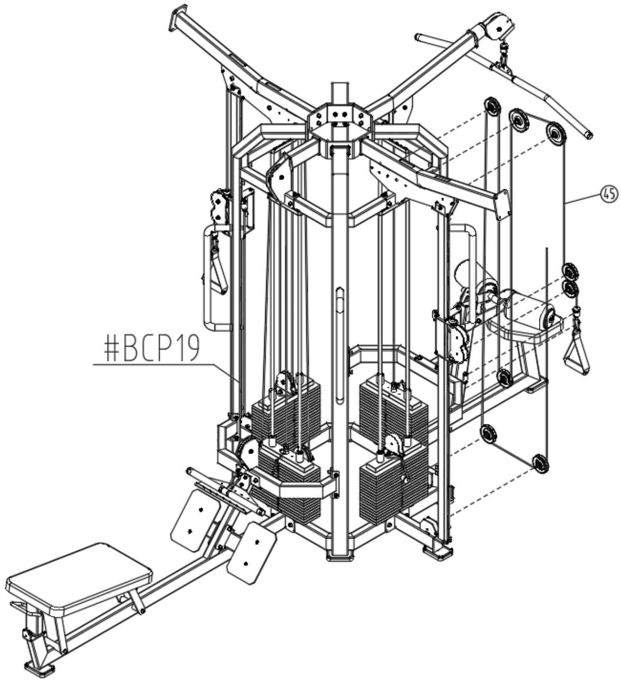

Assembly

Step 21: Connect #BCP16, #BCP17, #BCP20, and #46 to form #BCP21 using the following method:
- 16xHexagon socket head screw M10*30 (#47)
- 32xFlat washer M10-D20 (#11)
- 16xHexagonal self-locking nut M10 (#29)

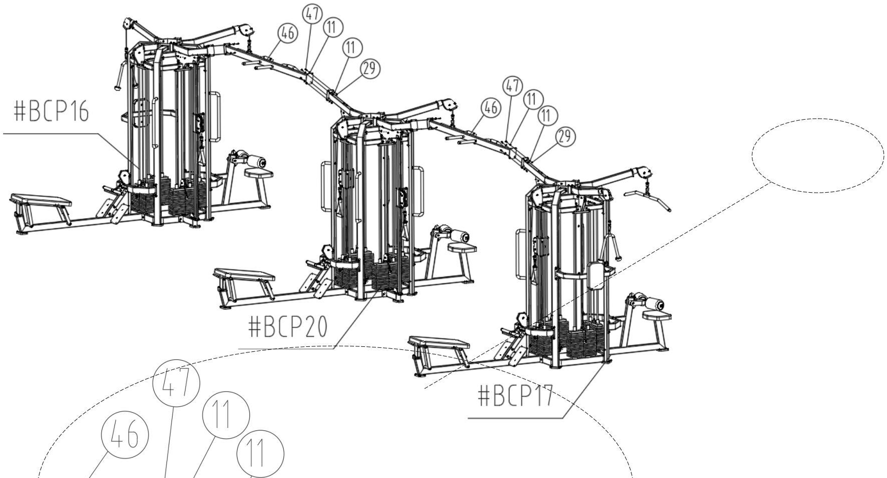

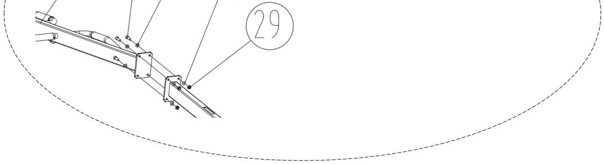

Important Tips

Now that the 6280C is assembled, you will need to take a moment to ensure that your unit is level and plumb.

Accessories List

Serial number	name	quantity	
1	Chassis	2	
2	Top Plate	2	
3	Ring plate	2	
4	Connecting column 1	2	2
5	Connecting column 2	2	
6	Connecting column 3	2	
7	Connecting column 4	2	2
8	Hexagon socket head screw M10*55	16	
9	Hexagon socket head screw M10*35	32	
10	Hexagon socket head screw M10*25	144	
11	Spring washer M10	220	
12	Flat washer M10-D20	204	
13	Guide rod fixing plate	8	
14	Guide rod	16	
15	Guide block set	6	
16	Counterweight		
17	Counterweight latch	8	
18	Hexagon socket head screw M8*20	16	
19	Double line weight guide block set	2	
20	High pull main frame	2	
21	High pull connection frame	2	
22	Double axis high back muscle press frame assembly	2	
23	Universal cushion	2	
24	Hexagon socket head screw M8*25	24	
25	Flat washer M8-D16	28	
26	Standing three-head lever support frame assembly	4	
27	Hexagon socket head screw M10*60	12	
28	Flat washer M10-D50	12	
29	Hexagonal self-locking nut M10	20	
30	High tension functional area wire rope	2	
31	Standing three-head back cushion combination	2	
32	Four-station three-head back cushion	2	
33	Three-end wire rope	2	
34	Low pull side frame set	2	
35	Low pull footrest assembly	2	
36	Low pull tray	2	
37	Low pull bracket assembly	2	
38	Hexagon socket head screw M8*16	4	
39	Spring washer M8	4	
40	Large back pad	2	
41	Bird chassis components	4	
42	Bird lever arm 1 assembly	2	
43	Bird Handrail	4	
44	Bird sliding adjustment set 1	2	
45	Bird Zone Wire Rope	2	
46	Bird connection beam assembly	1	
47	Hexagon socket head screw M10*30	8	
48	Low tension arm connecting bracket assembly	2	

Note: Pre-assembled parts are not listed in this table.