C404 Installation Guide

Seated Chest Press

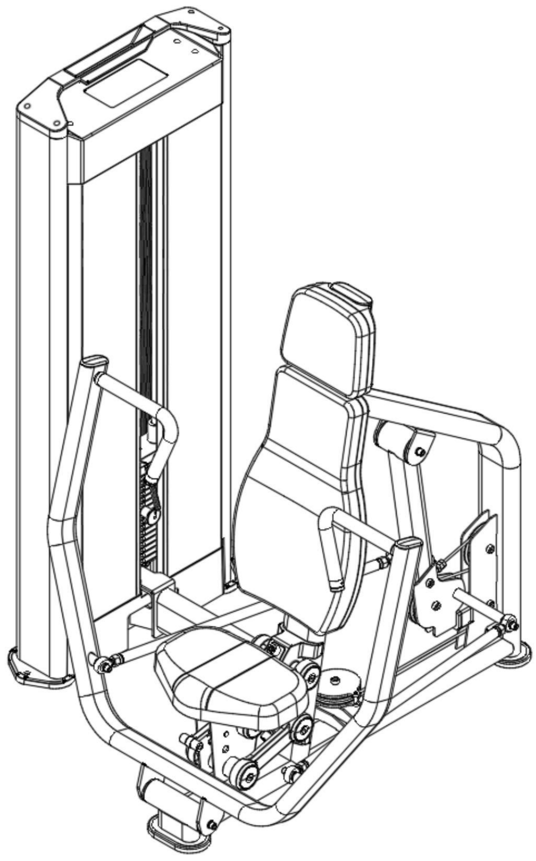

Table of contents

Introduction …………………………………………………………… 2

Assembly …………………………………………………………… 3

Accessories List …………………………………………………………… 16

Introduction

Please take the time to read this instruction carefully before installation. Please refer to the various lists in the manual to confirm the integrity and quantity of all parts (if there are parts missing or damaged during transportation, please call our after-sales service immediately for instructions). Please install the equipment correctly according to the relevant instructions. This equipment is designed to provide the smoothest and most effective exercise. After installation, you need to understand all functions to use it correctly. If you find any problems during use, you should stop using it immediately to avoid physical injury and equipment damage. Please refer to the relevant instructions in time to inquire about the cause. If you cannot solve it, please call our after-sales service. After reading all the instructions carefully, please continue

Rubber rod
Level
Hexagon wrench
Two people
Circlip pliers
Adjustable wrench

Assembly

Step 1: Place the chest push stand (#1) (#2) vertically on the ground:

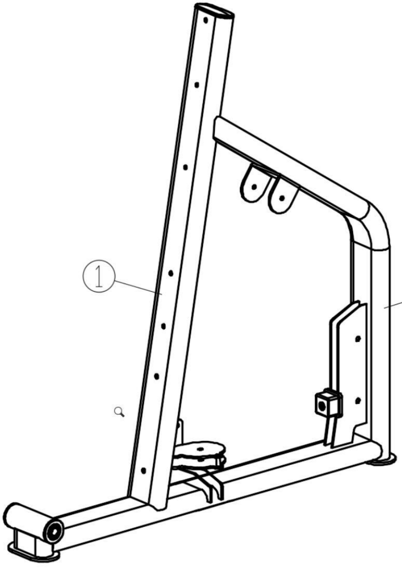

Assembly

Step 2: Connect the counterweight lower guard (#10) to the counterweight frame (#7) using the following method:
- 2xHexagon socket head screw (#11)

Step 3: Connect the Chest Press Adapter (#8) to the Weight Rack (#7) and Chest Press Side Rack (#44) as follows:
- 8xHexagon socket head screw (#3)
- 2xHexagon socket head screw (#9)
- 10x Spring washer (#6)·10x Flat washer (#4)

Step 4: Install the two weight rack feet (#12) to the weight rack (#7)
Install the two flat oval foot pads (#13) to the chest press side frame assembly (#44)

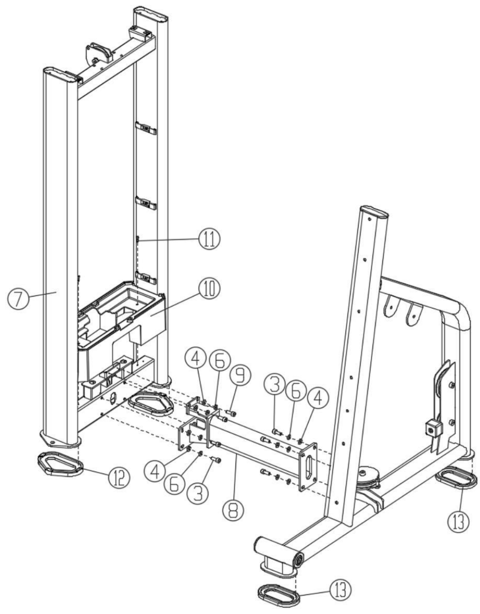

Assembly

Step 5: Connect the cushion (#15) to the seat (#14) using the following method:
- 4xHexagon socket head screw (#16)
- 4xSpring washer (#17)
- 4xFlat washer (#18)

Tighten the bolts with a wrench before proceeding to the next step

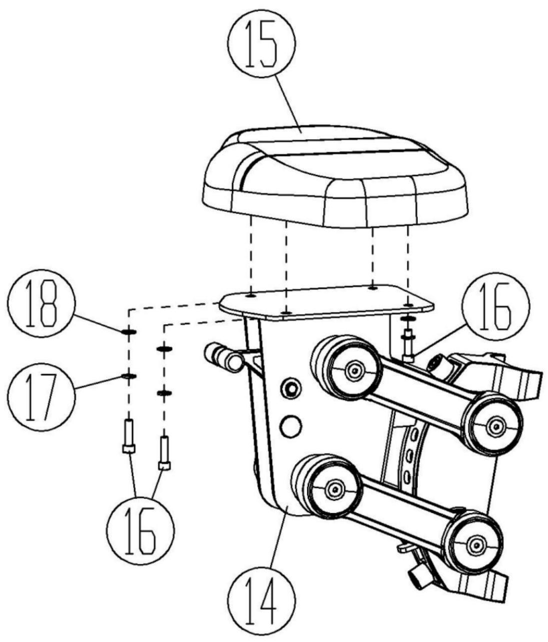

Assembly

Step 6: Connect the seat (#14) and the chest press side frame (#1/2) using the following method:
- 2xHexagon socket head screw (#19)
- 2xSpring washer (#6)
- 2xFlat washer (#4)

Tighten the bolts with a wrench before proceeding to the next step

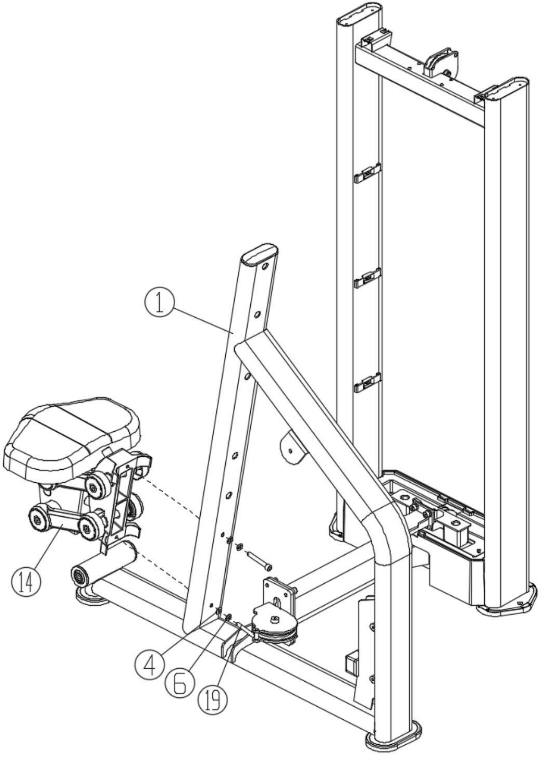

Assembly

Step 7: Connect the head pad (#20) and back pad (#21) to the chest press side frame (#1/2) using the following method:
·5xHexagon socket head screw (#22)
Tighten the bolts with a wrench before proceeding to the next step

Step 8: Install the five-hole plug (#23) to the chest press side frame I (#1).

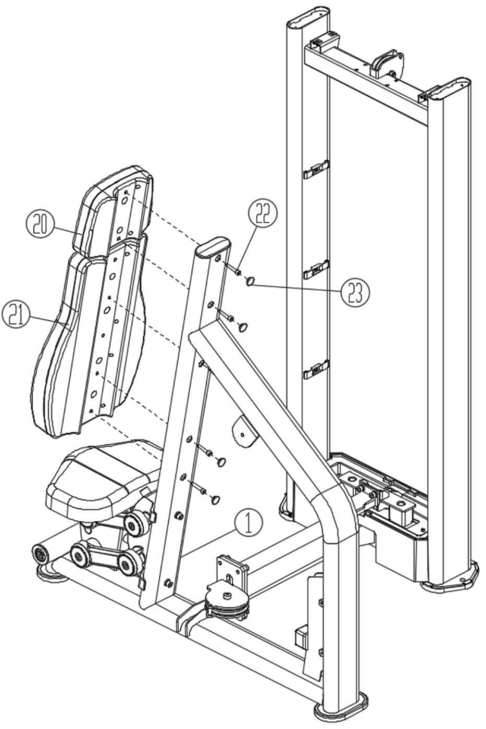

Assembly

Step 9: Connect the Chest Press Linkage (#24) to the Chest Press Side Frame (#1/2) using the following method:
·2xHexagon socket head screw (#3)
·2xSpring washer (#6)
·2xFlat washer (#4)
Tighten the bolts with a wrench before proceeding to the next step

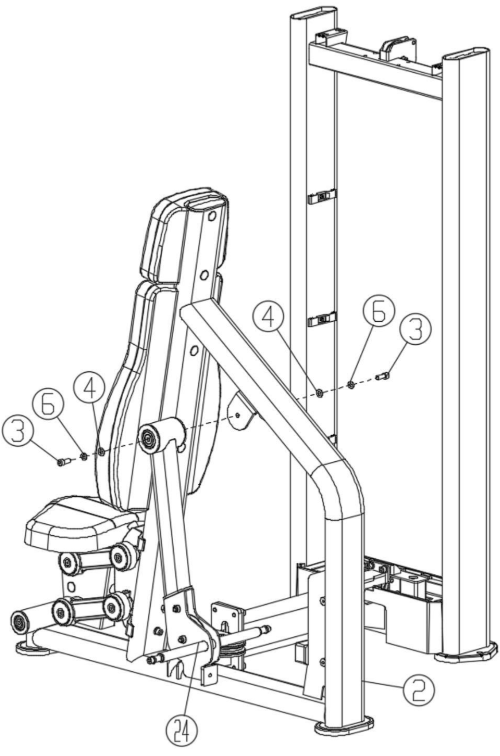

Assembly

Step 10: Locate the following diagram and assemble the lever arm (#25) (#26) (#27) and the following screws:
·8xHexagon socket head screw (#9)
·8xSpring washer (#6)
·2xLarge flat washer (#30)

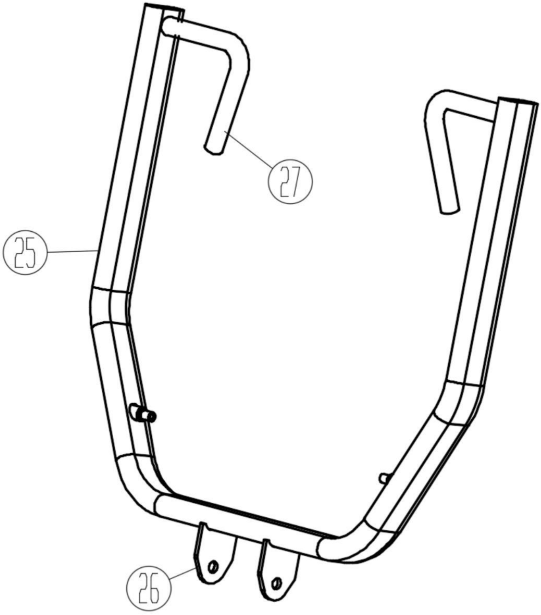

Assembly

Step 11: Connect the Lever Assembly (#25) and Lever Axle (#29) to the Chest Press Side Frame (#1) using the following method:

- ·2xHexagon socket head screw (#9)
- ·2xSpring washer (#6)
- ·2xLarge washer (#30)

Tighten the bolts with a wrench before proceeding to the next step

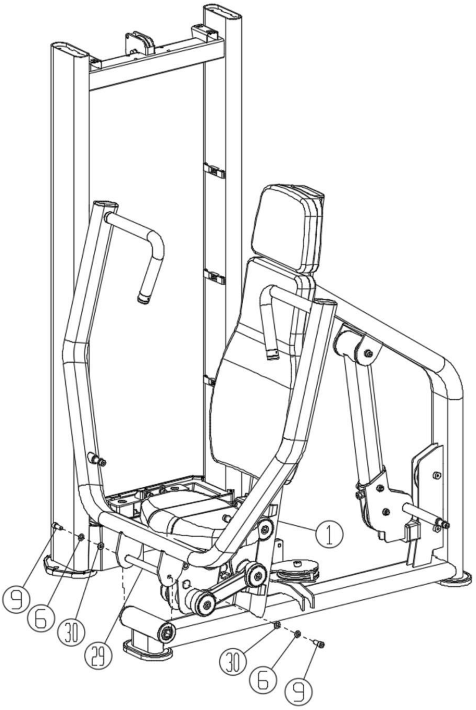

Assembly

Step 12: Connect the two chest press bars (#31) to the lever arm assembly and chest press linkage (#24) using the following method:
·2xHexagon socket head screw (#9)
·2xSpring washer (#6)
·2xFlat washer (#4)
Tighten the bolts with a wrench before proceeding to the next step

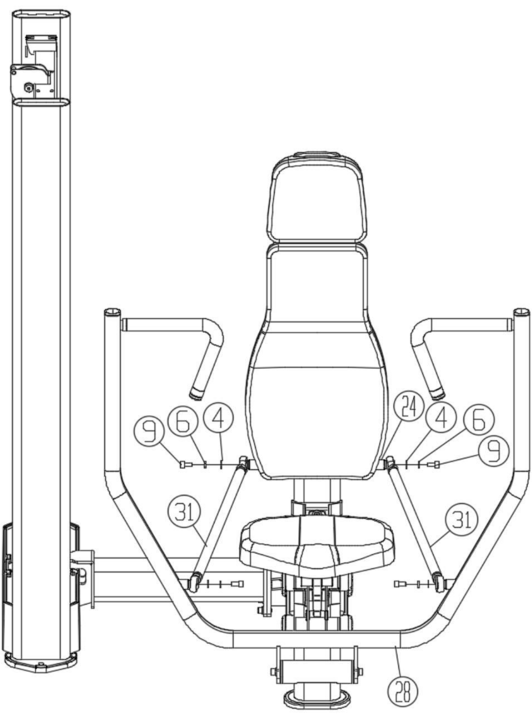

Assembly

Step 13: Slide the two rubber weight pads (#33) onto the two guide rods (#32).
Connect the two counterweight frame bases (#34) and the two guide rods (#32) and place them into the counterweight frame (#7) in the following manner:
·2xHexagon socket head screw (#35)
·2xSpring washer (#17)
·2xFlat washer (#18)
Tighten the bolts with a wrench before proceeding to the next step

Step 14: Install the 16 counterweights (#36) onto the guide rods (#32) with the rs facing up.
Install the guide block assembly (#37) onto the guide rod (#32).
Insert the counterweight pin (#39) into the counterweight (#36).
Slide the guide bar retaining plate (#38) onto the guide bar (#32).
Install the guide rod retaining plate (#38) to the counterweight frame (#7) as follows:
·2xHexagon socket head screw (#35)
Tighten the bolts with a wrench before proceeding to the next step

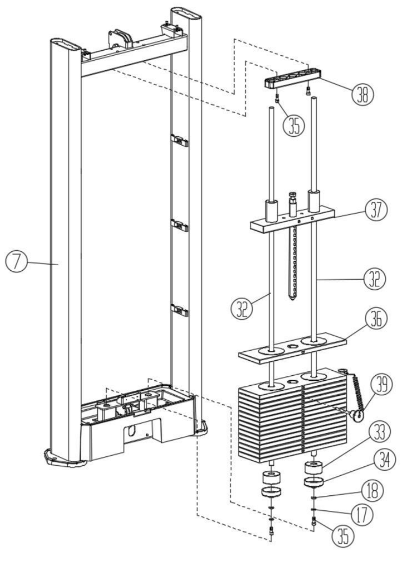

Assembly

Step 15: Attach the two 95 wire reels (#41) to the counterweight frame (#7) using the following method:
·2x Reel (#42)·2x Hexagon self-locking nut (#5)
·2x Flat washer (#43)· 2 x Flat Washers (#4)

Attach the four 120 wire reels (#45) to the chest press side frame assembly (#44) and the chest press linkage (#24) using the following method:
·4x Reel (#42)·4x Hexagon self-locking nut (#5)
·4x Flat washer (#43)·4 xFlat washer (#4)
Note that these reels are installed synchronously with the wire rope (#40).

Step 16: Attach the M14 bolt end of the wire rope (#40) to the counterweight frame (#7).
Attach the M12 bolt end of the wire rope (#40) to the chest push linkage (#24).

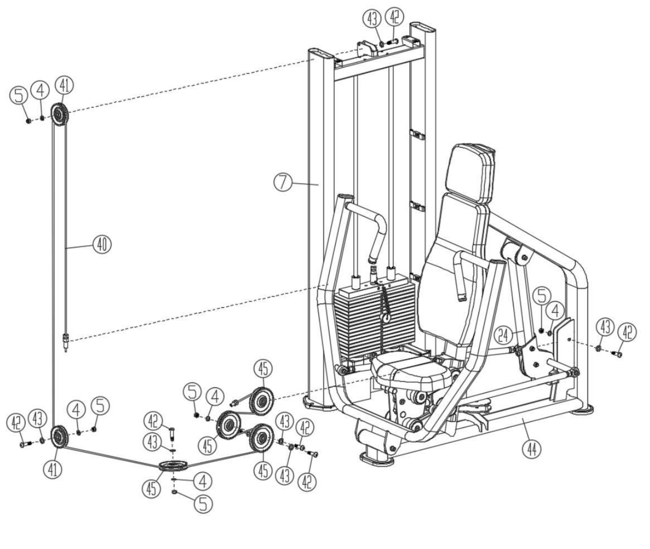

Assembly

Step 17: Slide the two trim strips (#47) into the two fenders (#46) and attach to the counterweight frame (#7) using the fender hold-down plates.
Slide the trim plate (#48) into the two baffles (#46) and attach to the counterweight frame (#7) using the baffle hold-downs.
Attach the upper guard (#49) to the counterweight frame (#7) as follows:
·4xHexagon socket head screw (#11)
Connect the upper shroud cover (#50) to the upper shroud (#49).

Attach the upper cover trim (#51) to the counterweight frame (#7) as follows:
·4xHexagon socket head screw (#52)

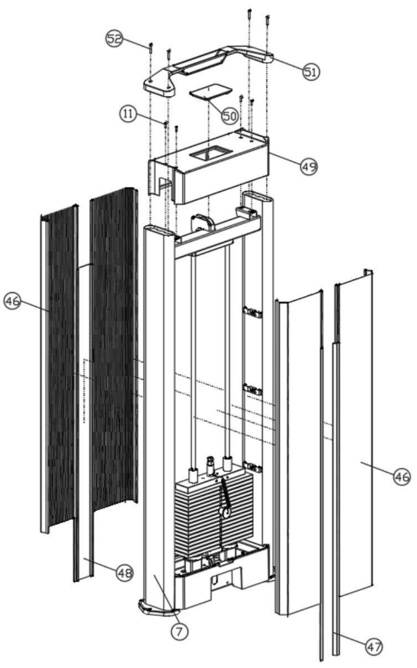

Assembly

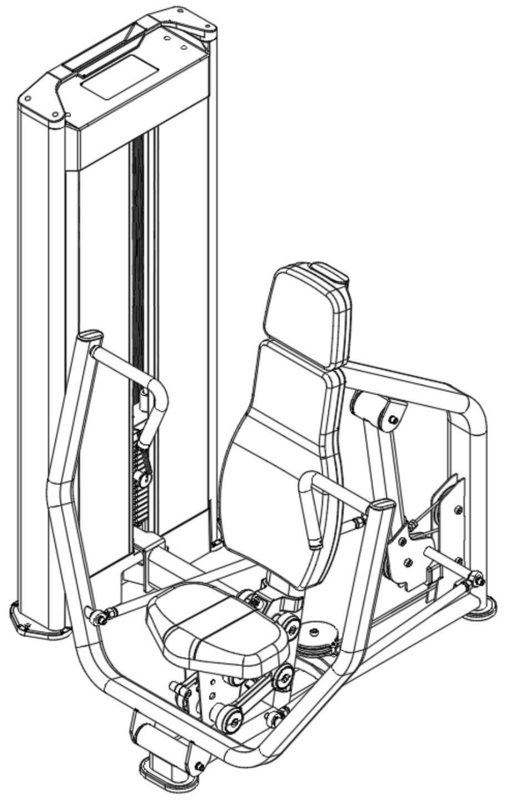

Important Tips

Now that the Seated Chest Press is assembled, you need to take a moment to make sure your unit is level and plumb. Use a level to check that the guide bars are plumb in both directions. If they are not plumb, you may have to loosen some of the frame hardware and reassemble and tighten the bolts.

Accessories List

Serial number	Name and specifications	quantity
1	Chest press side rack	1
2		
3	Hexagon socket head screw (M10*25)	10
4	Flat washer (10)	22
5	Hexagonal self-locking nut (M10)	6
6	Spring washer (10)	18
7	Counterweight rack	1
8	Chest Press Connection Rack	1
9	Hexagon socket head screw (M10*20)	8
10	Counterweight lower guard	1
11	Hexagon socket head screw (M5*16)	8
12	Weight rack foot pads	2
13	Flat oval foot pad	2
14	Seats	1
15	cushion	1
16	Hexagon socket head screw (M8*30)	4
17	Spring washers (8)	6
18	Flat washers (8)	6
19	Hexagon socket head screw (M10*70)	2
20	Head pad	1
21	Back pad	1

Accessories List

Serial number	Name and specifications	quantity
22	Hexagon socket head screw (M8*40)	5
23	20-hole plug	5
24	Chest push linkage	1
25	Arm Group	1
26		
27		
28		
29	Chest press arm shaft (φ20*192)	1
30	Large Washer (10)	2
31	Chest push bar	2
32	Universal weight guide rod	2
33	Counterweight rubber pad	2
34	Counterweight rack base	2
35	Hexagon socket head screw (M8*20)	4
36	Counterweight	14
37	Guide block set	1
38	Guide rod fixing plate	1
39	Counterweight latch	1
40	Chest push rope	1
41	95 reel	2
42	Reel-32	6

Accessories List

Serial number	Name and specifications	quantity
43	Flat washers (12)	6
44	Chest press side rack set	1
45	120 reel	4
46	Bezel	4
47	Counterweight decorative strip	2
48	Counterweight source decorative plate	1
49	Counterweight upper guard	1
50	Upper guard cover	1
51	Upper cover decoration	1
52	Hexagon socket head screw (M6*30)	4

Note: Pre-assembled parts are not listed in this table.